OMEGA2

Profile & tools for system modelling and verification with UML 2.x & SysML

Iulian OBER, Iulia DRAGOMIR
IRIT / University of Toulouse

Tools developed in partnership with

Work supported by

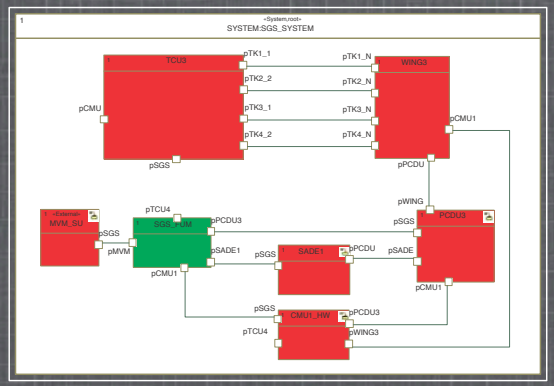

$\models$

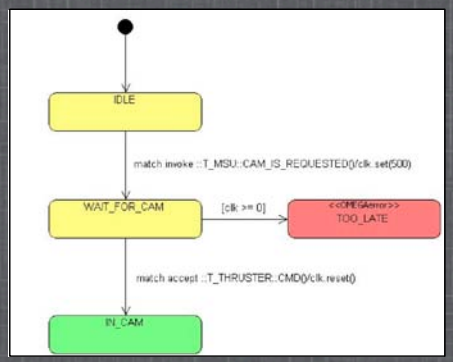

Embedded systems development

computation under physical constraints

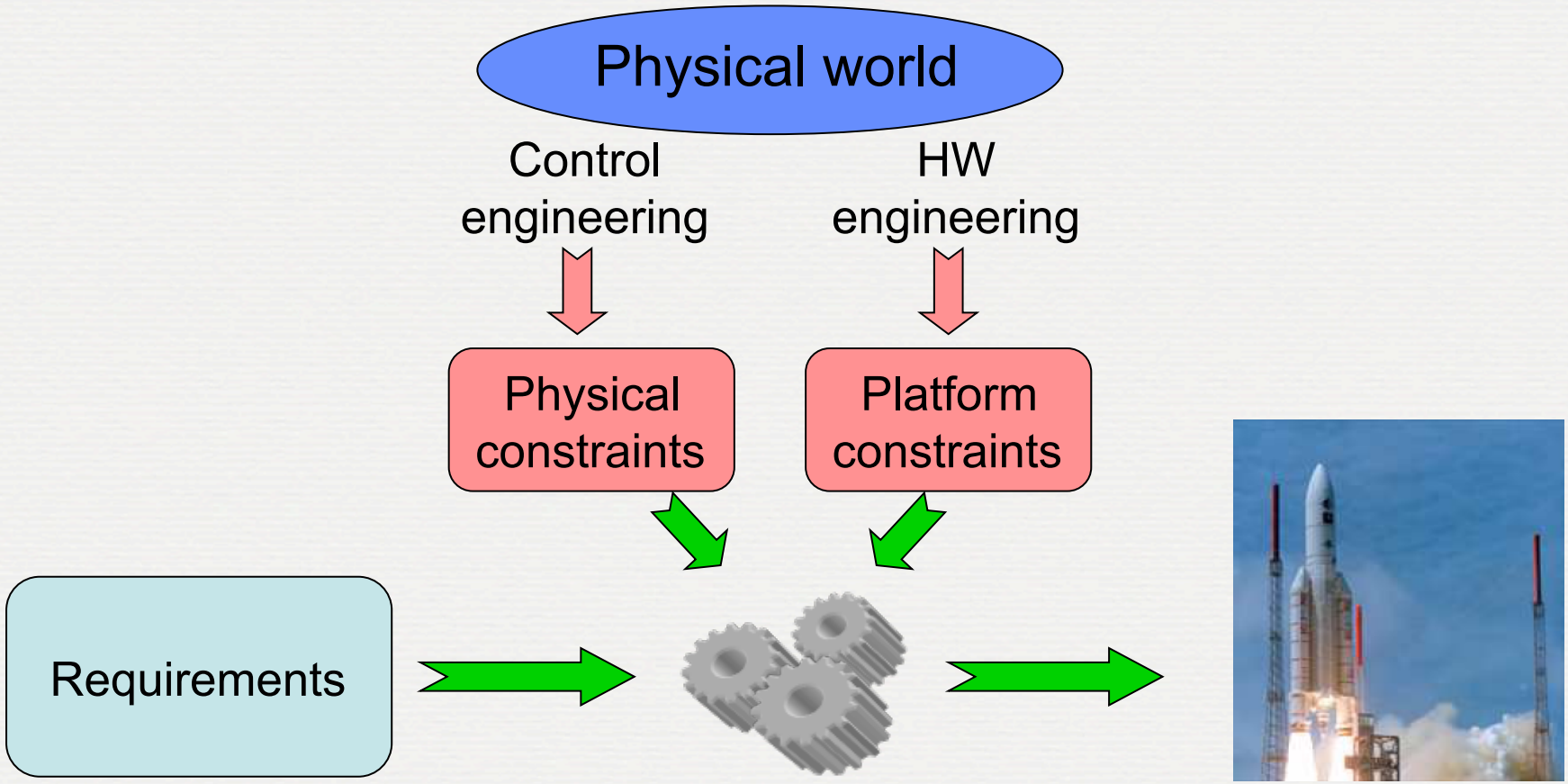

Model driven engineering

mastering the complexity

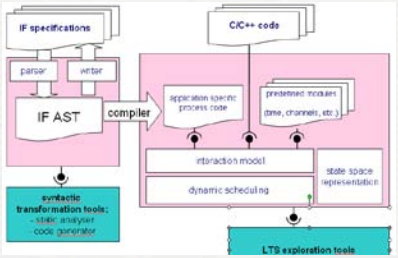

Exploratory models

Abstract
Understandable
Acurate
Predictive
Inexpensive

Productive models

Abstract
Understandable
Acurate
Predictive
Inexpensive

iterative development process

the model
=
the system

Model driven engineering

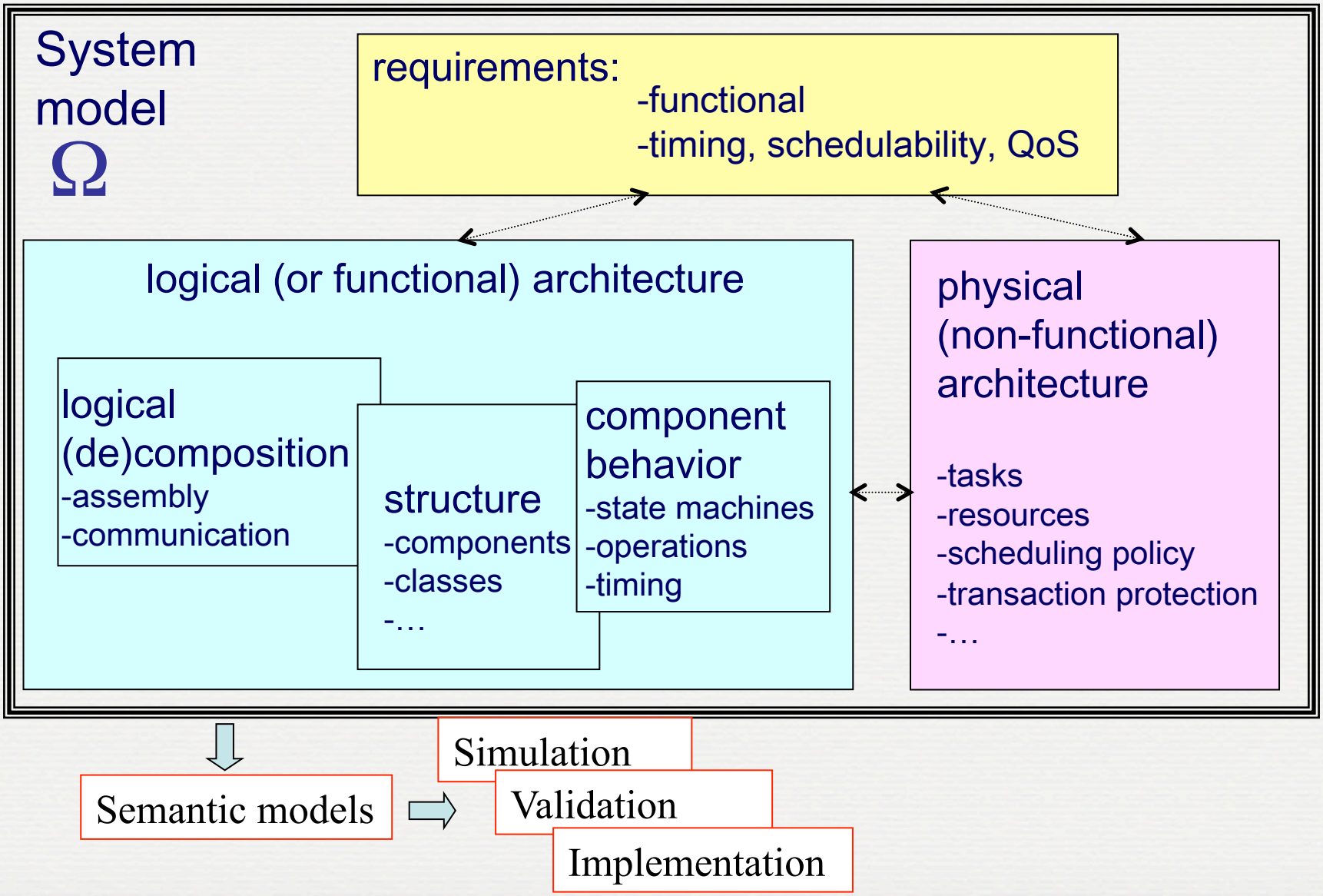

Outline

- Overview of OMEGA v1 - profile and tools
- OMEGA v2 language extensions
  - composite structures
  - concurrency model
- Implementation in IFx2
- Conclusions

OMEGA language

A large subset of UML (1)

+

(More) model coherence constraints

+

A formal operational semantics (2)

+

RT & Verification extensions (3)

(1) Structure (classes, relations, composite structures) and behaviour (SM, actions)

(2) Based on the Rhapsody tool semantics and defined in [Damm, Josko, Pnueli, Votintseva 2002 & Hooman, Zwaag 2003]

(3) Timing constraints, timed behaviour (semantic projection to timed automata), property observers

OMEGA v1 language

UML class diagrams

- active / passive classes
- associations
- composition
- generalization

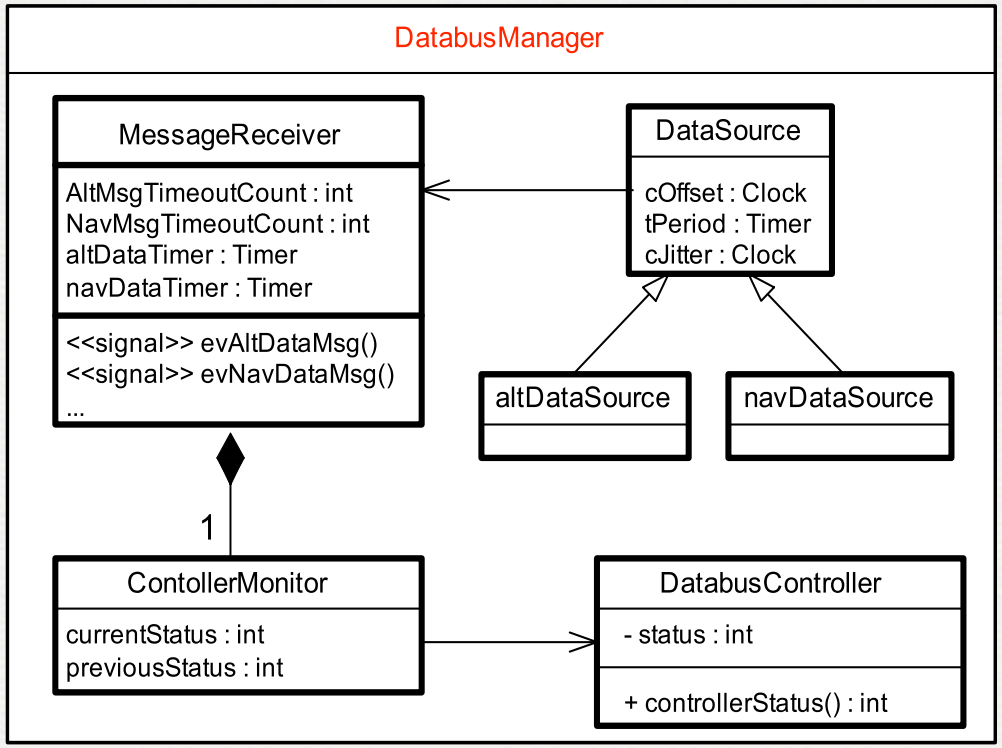

OMEGA v1 language

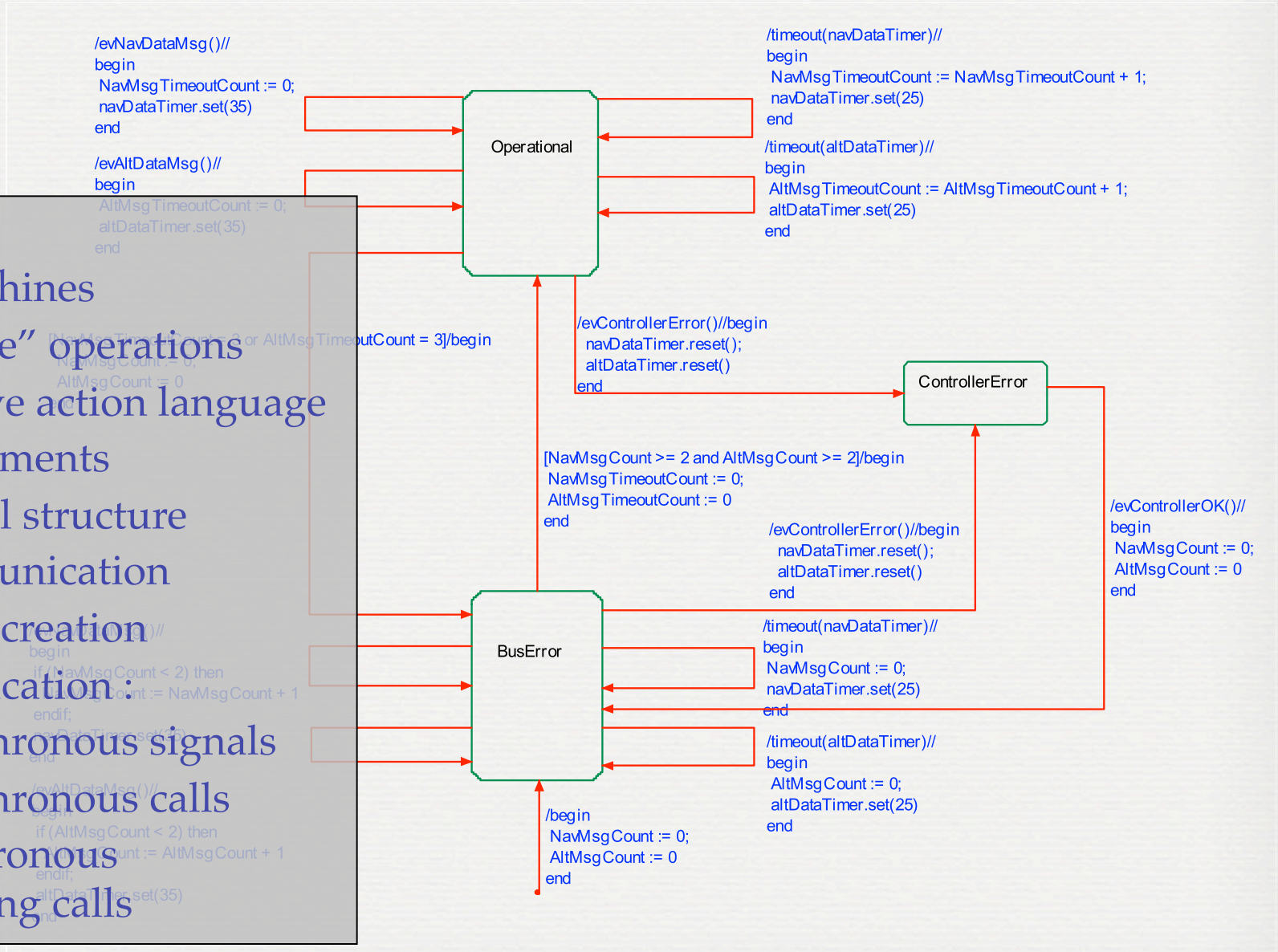

Behaviour

- state machines
- "primitive" operations
- imperative action language
  - assignments
  - control structure
  - communication
  - object creation
- communication :
  - asynchronous signals
  - asynchronous calls
  - synchronous blocking calls

OMEGA v1 language

Composition & communication semantics

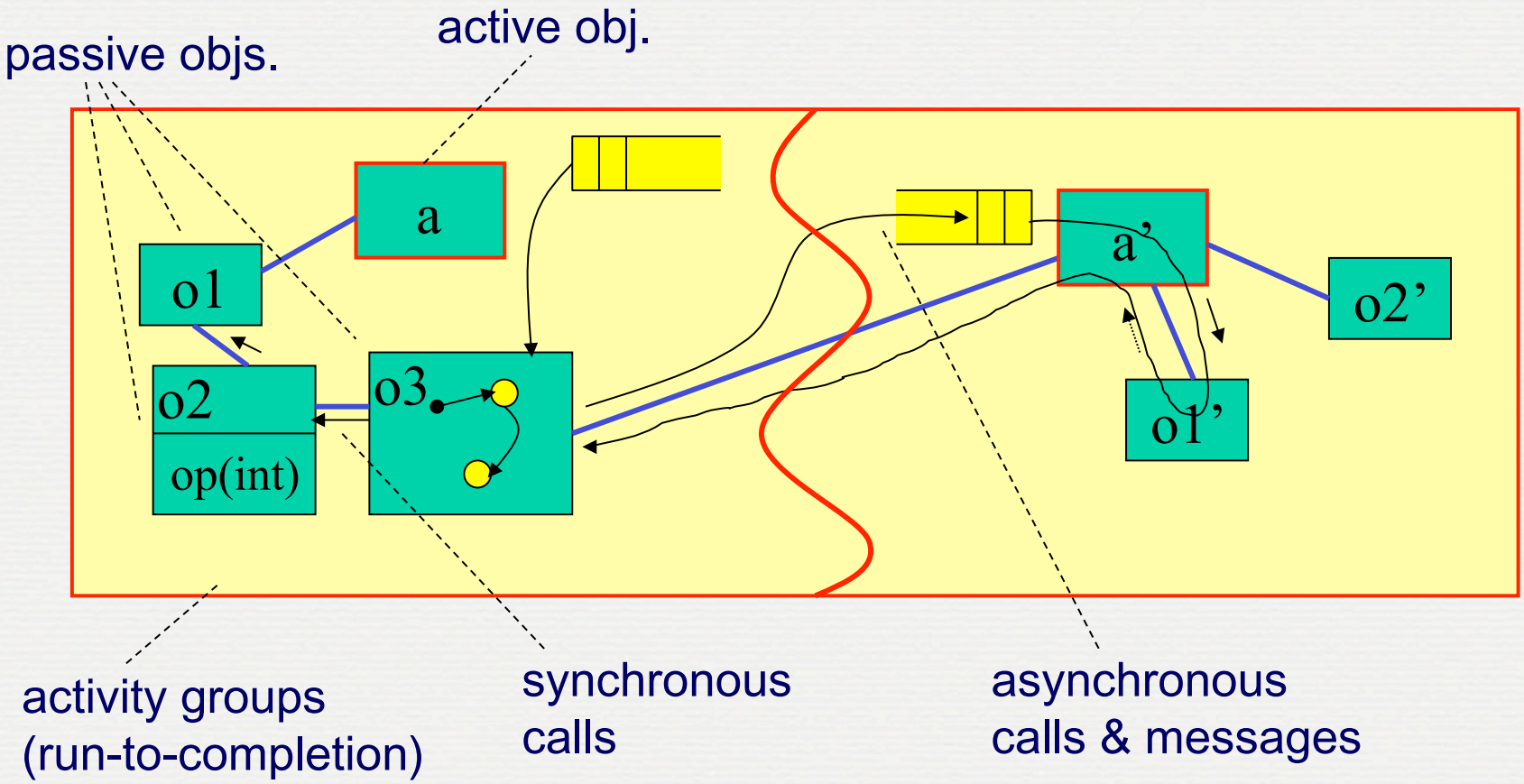

OMEGA v1 language

Observers: objects monitoring the system state & events and giving verdicts

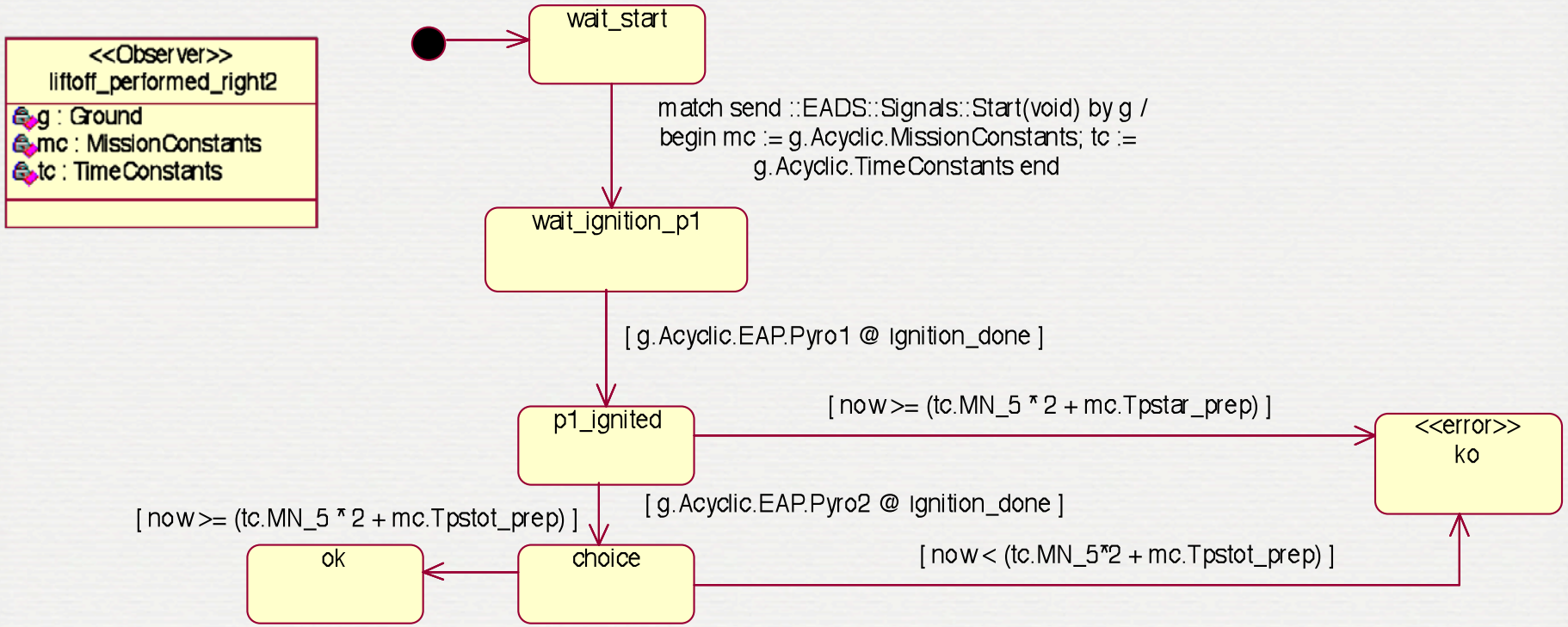

IFx toolset

Goals: early model validation & debugging

Principle: translation to a formal timed automata model

Functionality

simulation

interactive, random, replay/ analyze diagnostics…

verification

observers, μ-calculus, state graph minimisation (bisimulation),…

static analysis

dead variable/code elimination, slicing,…

Architecture

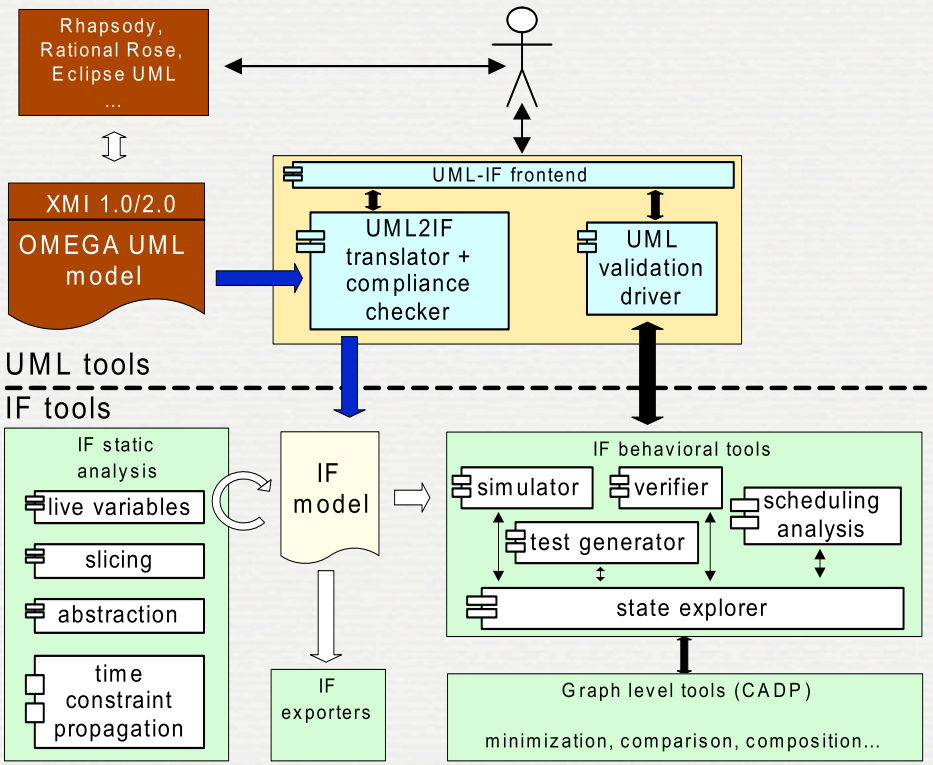

Tool workflow

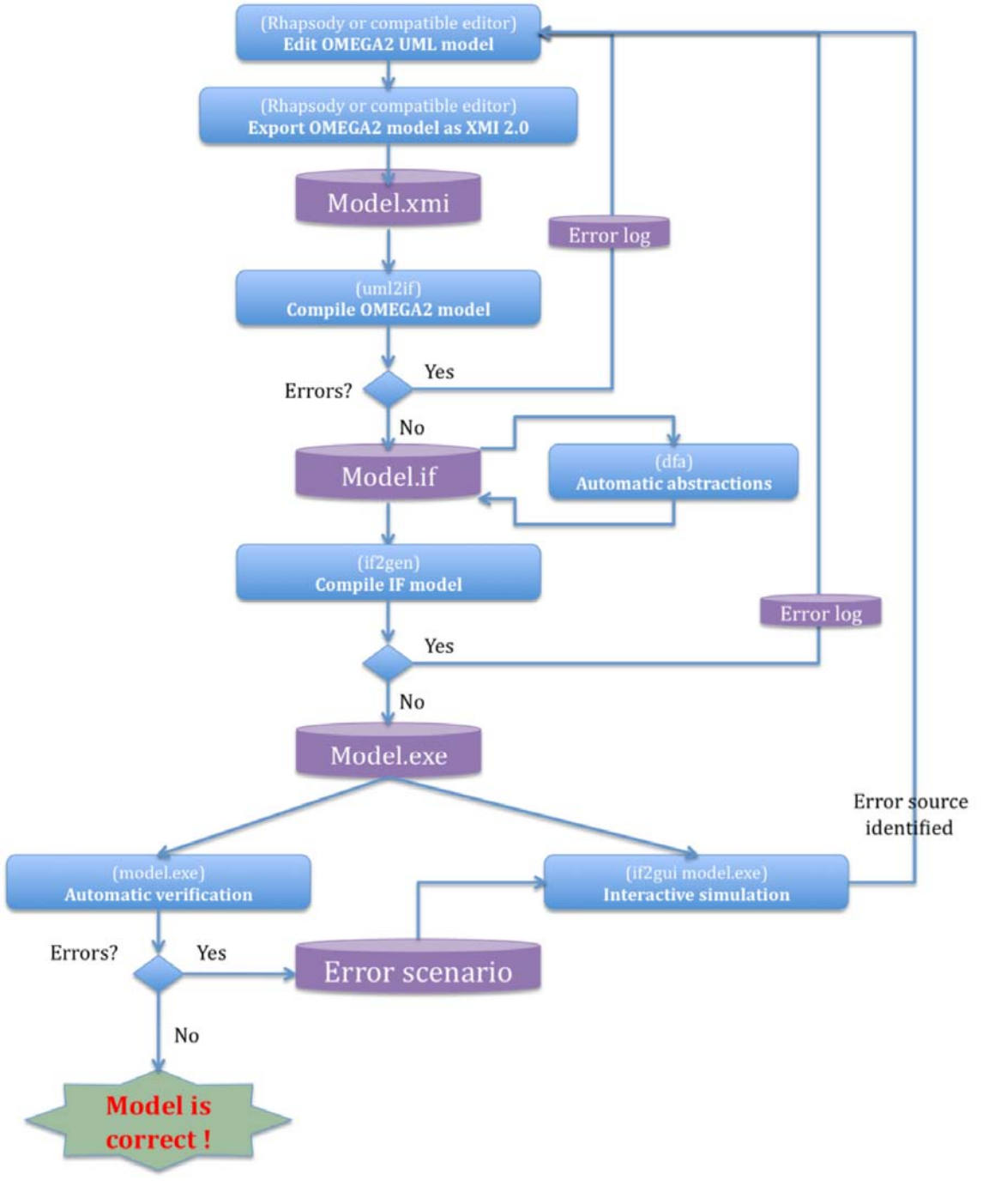

Uses of OMEGA

Case studies:

- EADS Astrium Space Transportation:
  Verification of functional & scheduling properties of the Ariane-5 flight software (UML) [FMOODS06]
- Nationaal Lucht- en Ruimtevaartlaboratorium (NLR):
  Timing verification of airborne data acquisition module (UML) [UML&FM08]
- ESA / EADS Astrium:
  Simulation and verification of ATV Solar Wing Management (SysML)

Tool development partially financed by ESA

Outline

- Overview of OMEGA v1 - profile and tools
- OMEGA v2 language extensions
  - composite structures
  - concurrency model
- Implementation in IFx2
- Conclusions

Motivation - missing features

- **Language**
  - Structure: *hierarchical architecture modelling*
    - ⇒ UML 2.x composite structures
    - ⇒ SysML internal block diagrams
  - Concurrency model: *better synchronisation constructs*
  - Behaviour: parallel regions, other minor updates
- **Tool**
  - Compatibility with recent UML/SysML editors (Rhapsody 7.x) -- support for XMI 2.x

UML / SysML composite structures

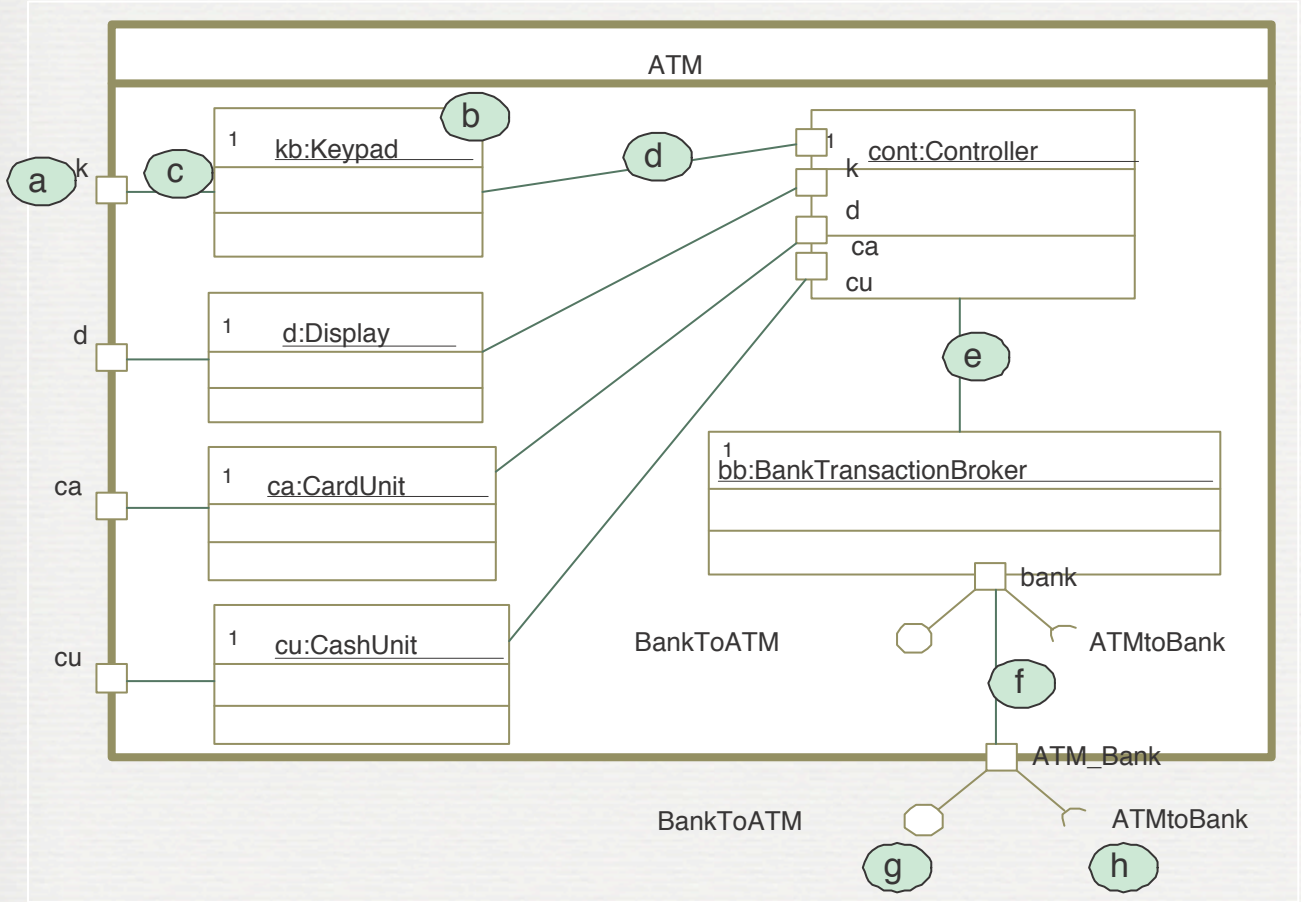

Elements :
(a) port
(b) part
(c) delegation connector (port-to-instance)
(d) assembly connector (port-to-instance)
(e) assembly connector (instance-to-instance)
(f) delegation connector (port-to-port)
(g) provided interface
(h) required interface

Ambiguous structures

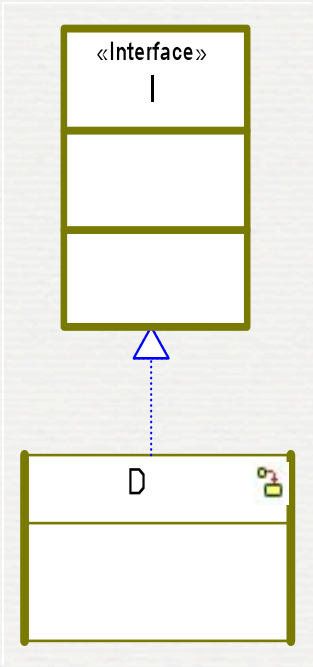

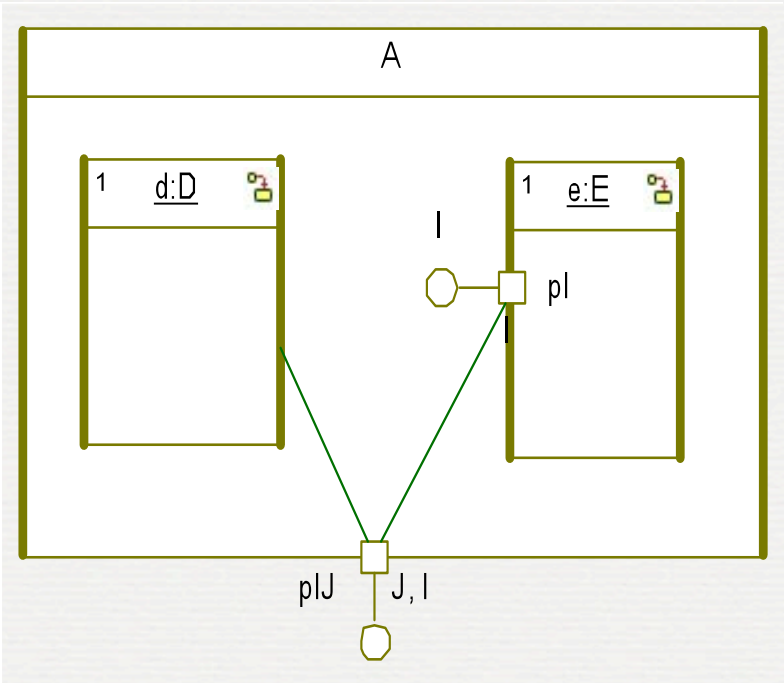

Ambiguous structures

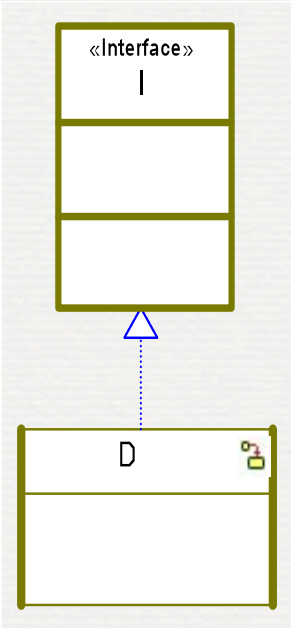

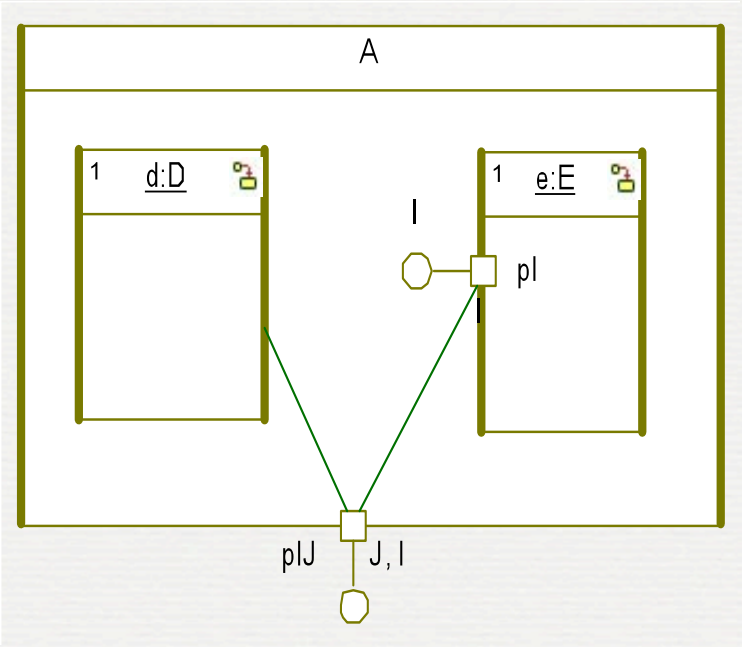

Ambiguous structures

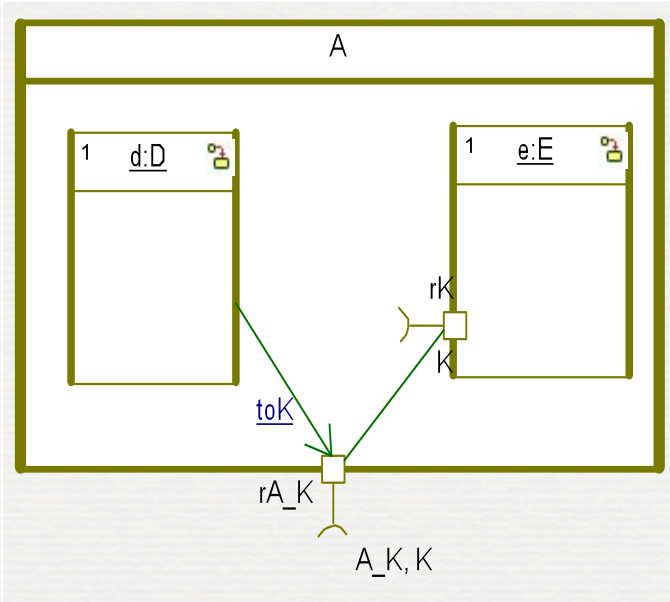

should imply

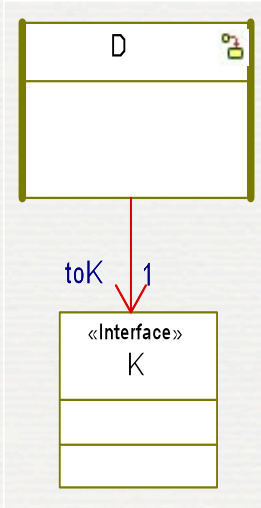

Unambiguous structures

OMEGA objective: clear & coherent semantics

$\Downarrow$

Rules for well-formed structures

Static type safety

Operational semantics

Bidirectional vs. unidirectional ports

Bidirectional ports lead to typing problems:

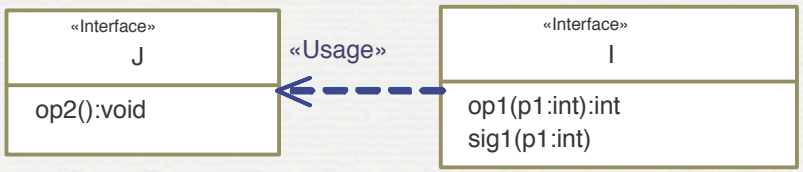

- example of action in A:

  port_0.op2() // port_0 complies to J

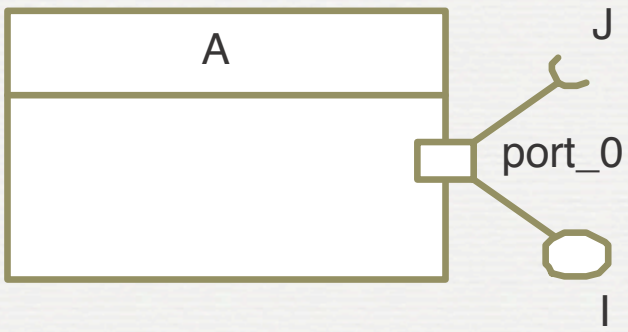

- behaviour specification of port_0:

  input op2() : // port_0 complies to J **and** I
  ...
  input op1(x) : // port_0 complies to J **and** I
  ...
  input sig1(x) : // port_0 complies to J **and** I
  ...

OMEGA: no bidirectional ports

Replace with:

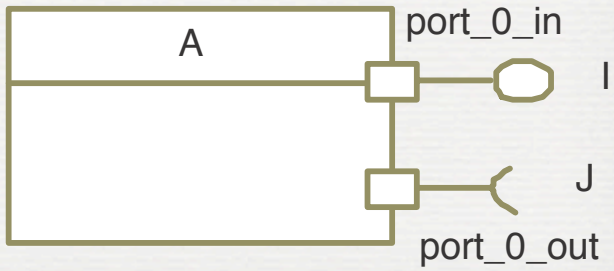

Connector directionality

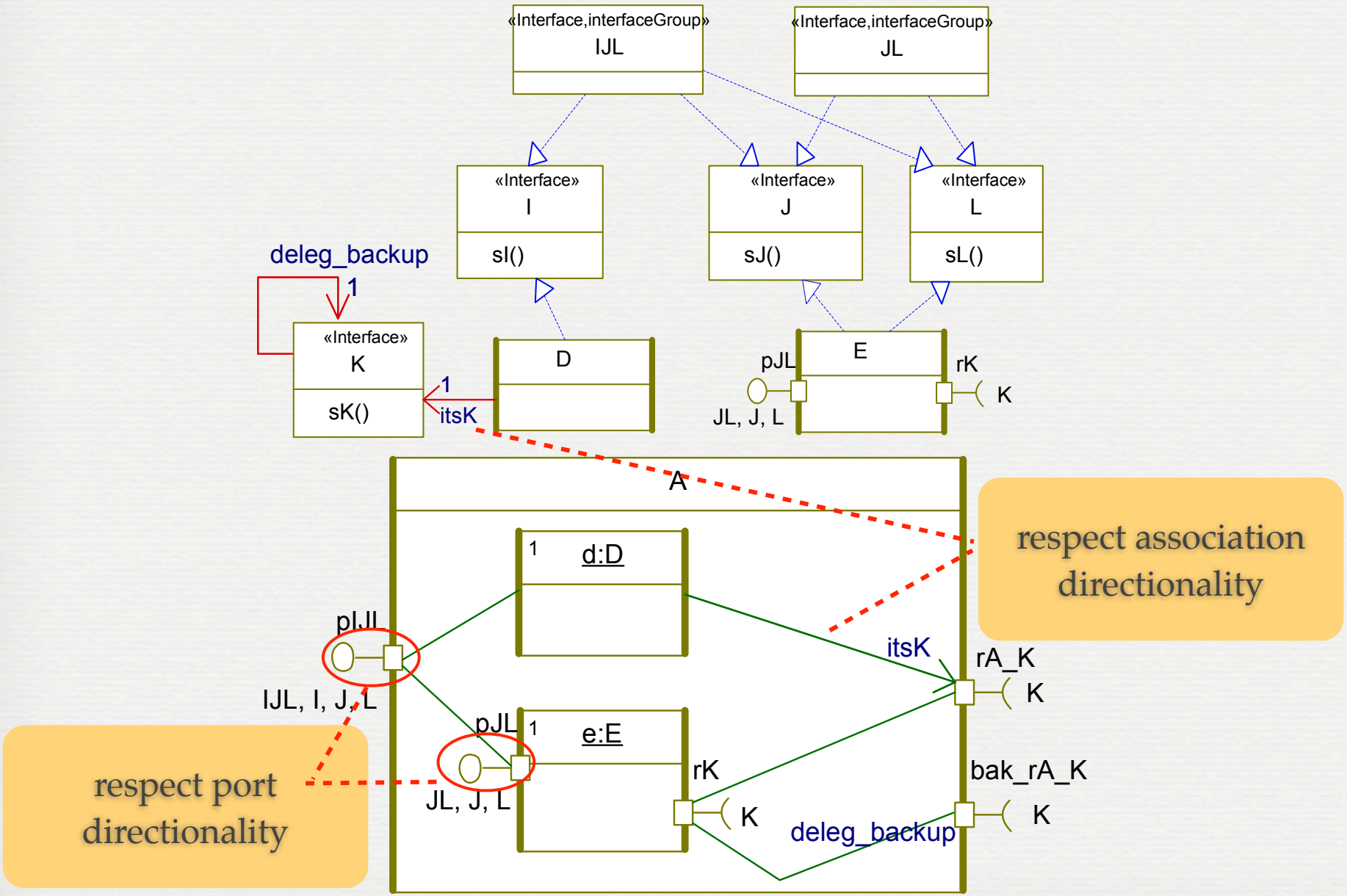

Connector typing

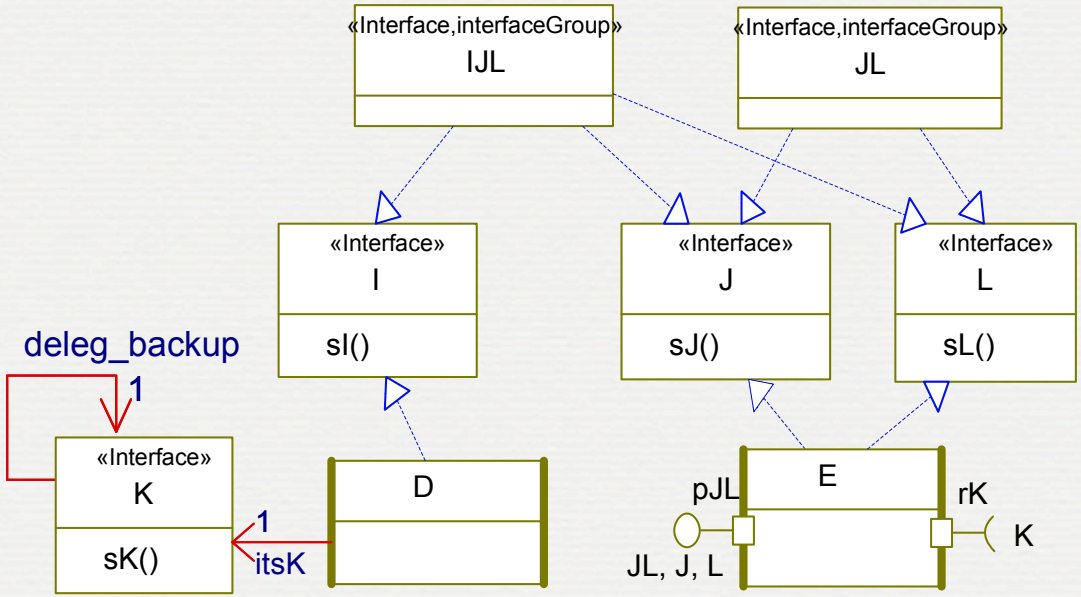

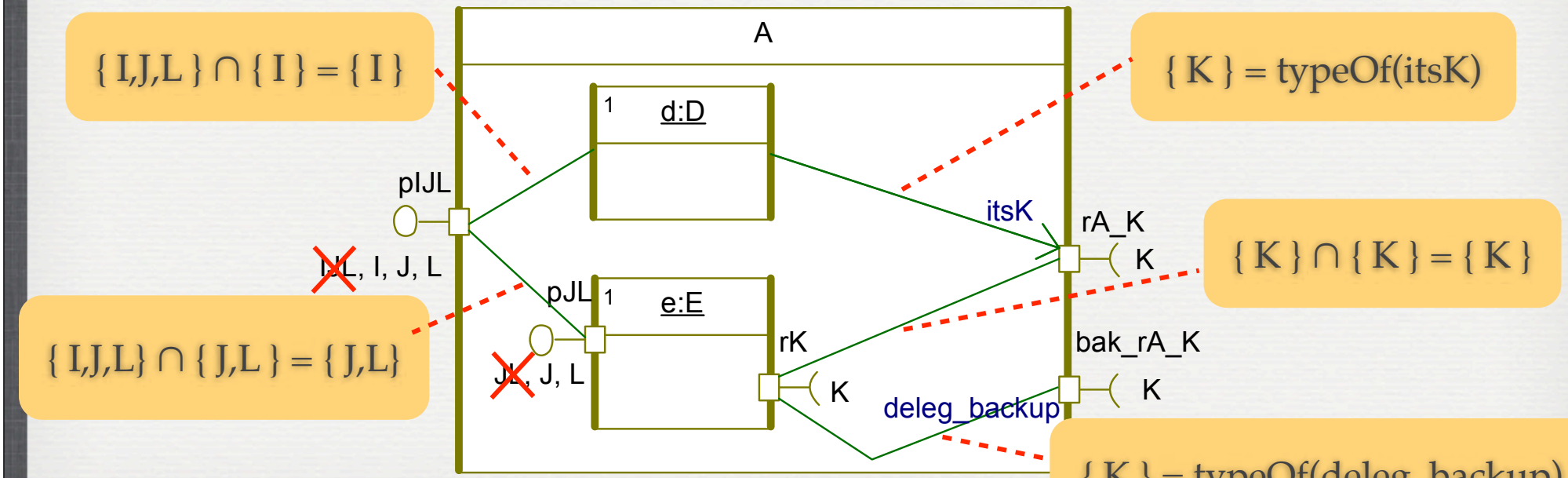

$\{ I,J,L \} \cap \{ I \} = \{ I \}$

$\{ K \} = \text{typeOf}(\text{itsK})$

$\{ K \} \cap \{ K \} = \{ K \}$

$\{ I,J,L \} \cap \{ J,L \} = \{ J,L \}$

$\{ K \} = \text{typeOf}(\text{deleg\_backup})$

Port behaviour

Default port behaviour:

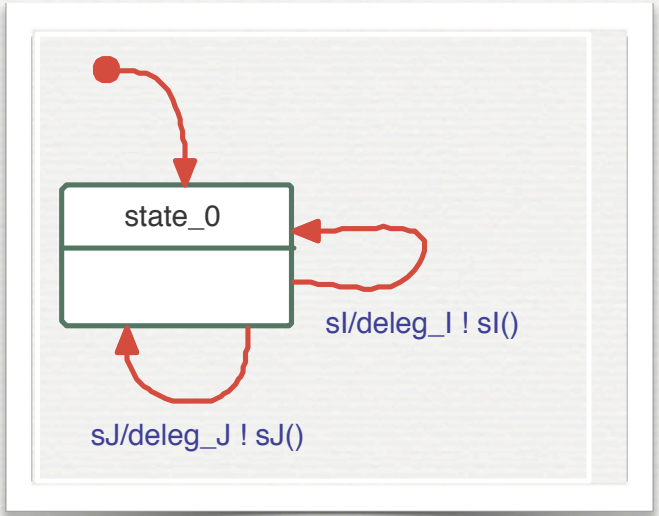

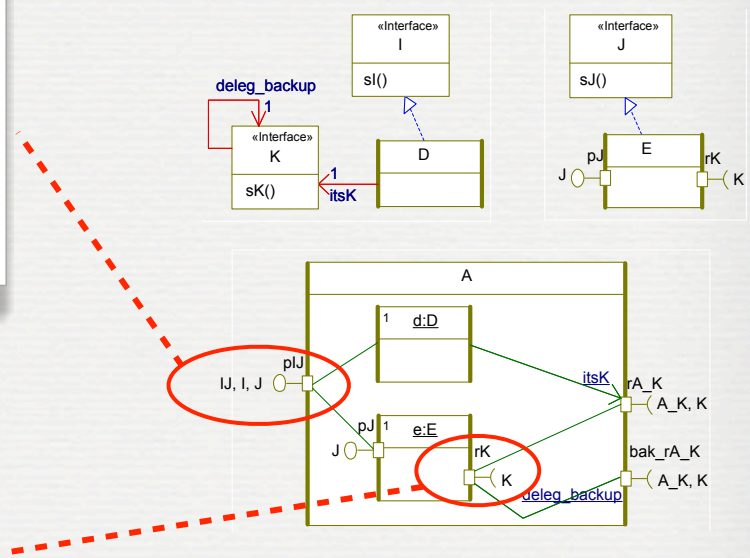

Explicit port behaviour:

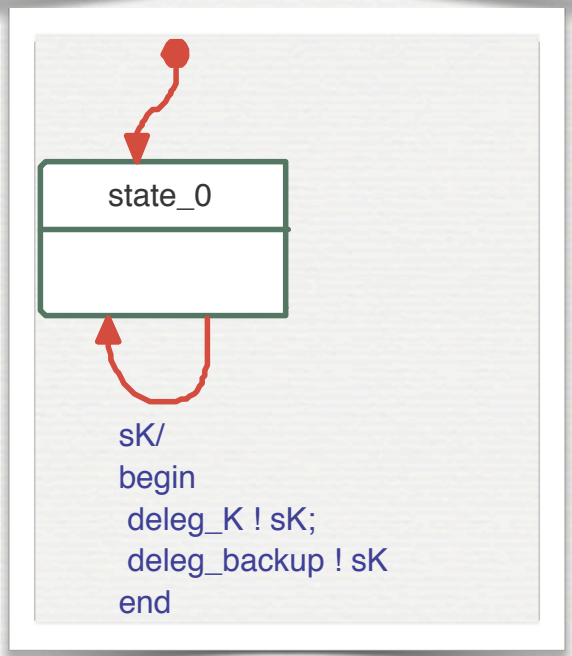

Concurrency model

- Lack of sharing & synchronization mechanisms

  ⇒ Ada-like protected objects (with *functions* and *guarded entries*)

  ⇒ Coherent with the activity group semantics

  ⇒ Rules to make them *coherent with composite structures*

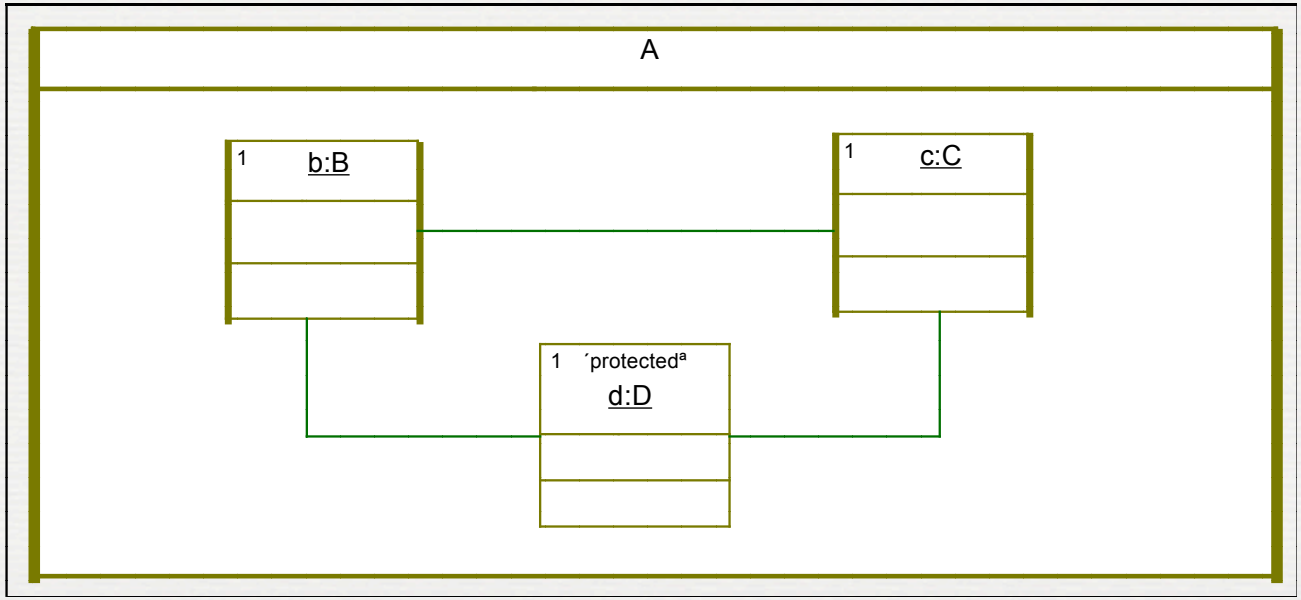

Outline

- Overview of OMEGA v1 - profile and tools
- OMEGA v2 language extensions
  - composite structures
  - concurrency model
- Implementation in IFx2 and evaluation
- Conclusions

IFx2

- Same overall architecture
  - translation of models (XMI 2.x) to IF using Eclipse/UML
- Principles and evaluation
  - ports and connectors handled as *first class* elements
    ⇒ dynamic routing for requests
    ⇒ allows for dynamically reconfiguring composite structures
  - offline partial-order reduction to reduce impact of routing actions on the size of the state space
    ⇒ state space explosion is not aggravated by new features

Conclusions and future work

- Simple but not simplistic profile for real-time software & systems modelling
  - fully defined operational semantics
  - simulation & verification toolset

  ⇒ complementary to broader approaches such as MARTE
- Tool & profile currently evaluated by ESA and Astrium Space Transportation on realistic models
- Current and future work
  - formalize composite structures type system & prove type safety
  - improve profile & tool: SysML adaptations, improved integration and user experience, advanced diagnostics features, etc.