Scheduling Analysis Modeling with MARTE

Rémi Schnekenburger

CEA LIST, LISE Labs

27 mai 2009

Journées Neptune 2009, Paris, France

Embedded Systems Design

- Embedded systems trends:
  - ➔ Distributed/Multiprocessor
  - ➔ Resource-constrained
  - ➔ Safety-critical &…Time-critical!
- Timing problems:
  - ➔ Response times miss deadlines
  - ➔ Messages are lost (buffer overload)
  - ➔ Processors and buses overloaded
- Analysis techniques/tools help to calculate:
  - ➔ Response times of functions and tasks on processors.
  - ➔ Latency of signals and messages on networks.
  - ➔ End-to-end delays (e.g., from sensor to actuator over a network)
- …in presence of complex interactions!

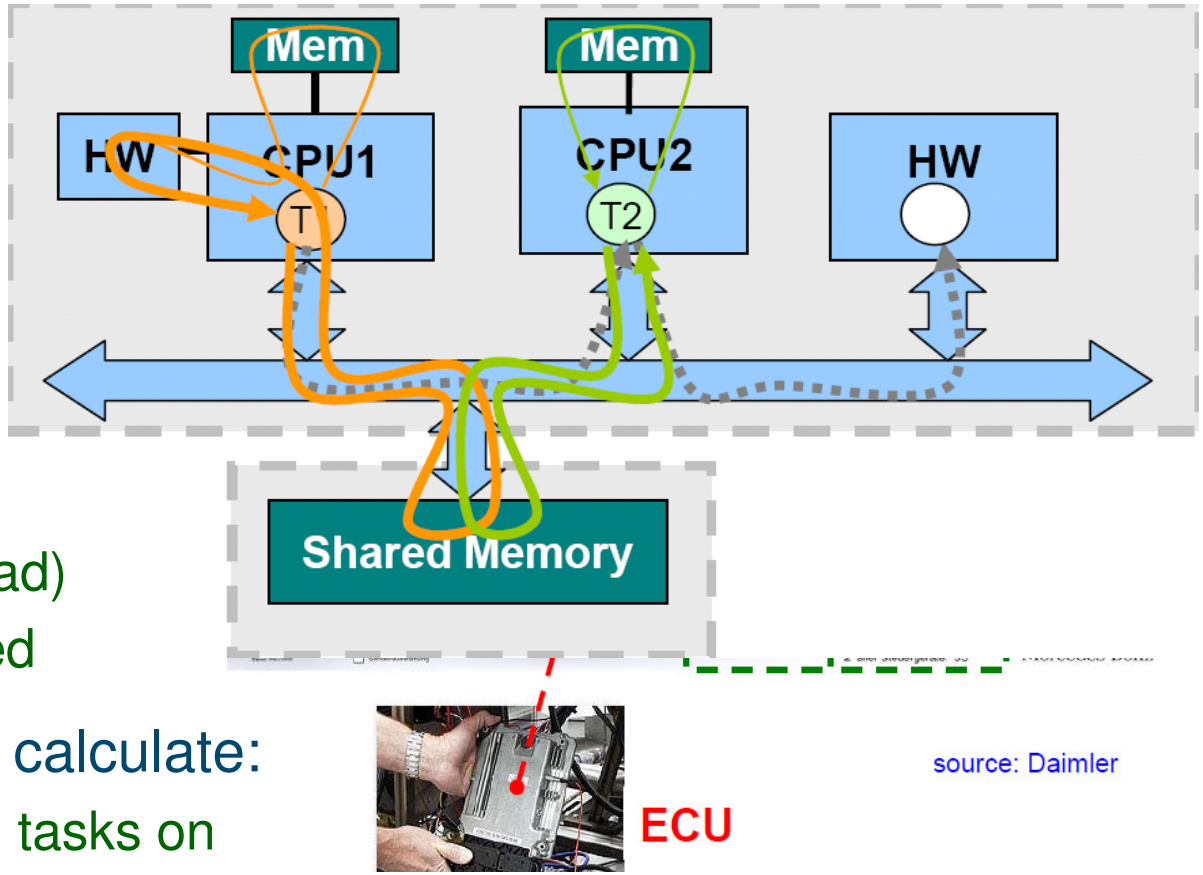

source: Daimler

Scheduling Analysis Advantages

- Calculate timing parameters based on a multi-task model:
  - ➔ Allows early evaluation, before simulation is even possible.
- High analysis speed...
  - ➔ It becomes feasible to explore many scheduling alternatives in search of an optimal solution
- Analysis provides “worst case” coverage

ed

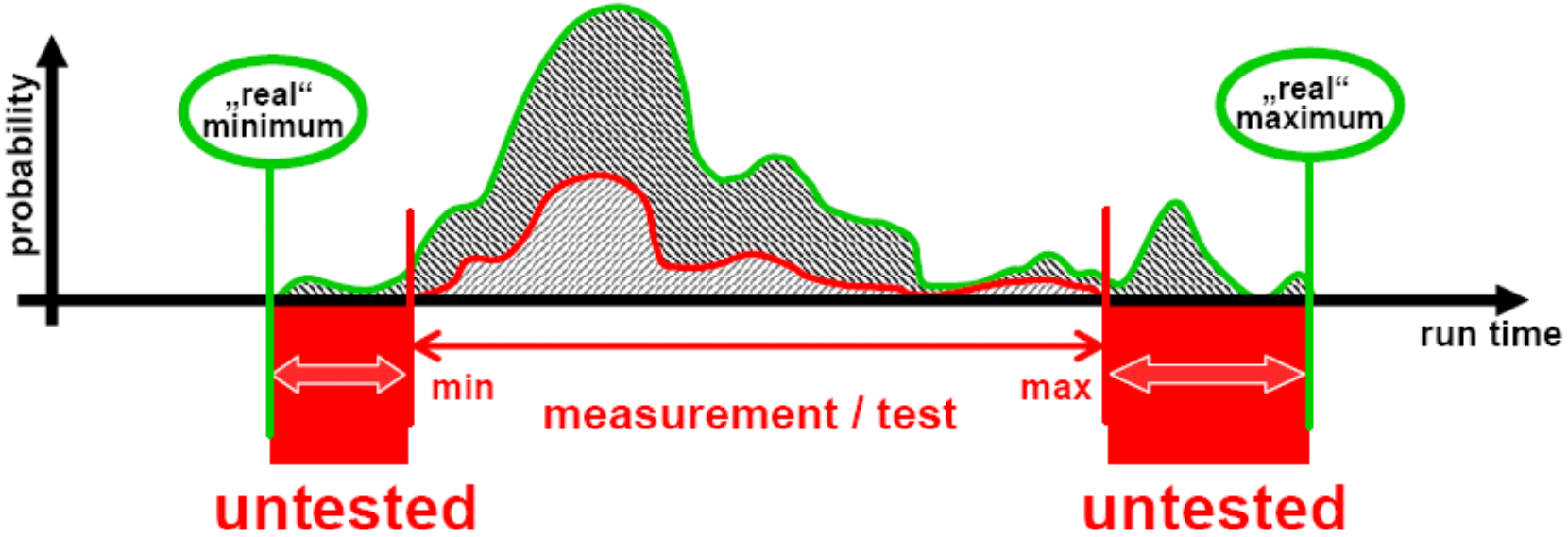

Domain-Specific Modeling Languages (DSML)

- Use of domain concepts as language constructs
  - ➔E.g. concepts of “memory”, “task”, “bus”, instead of general ones “components”, “nodes”, “classes”…
- Ability to specify timing information in models
  - ➔Automate the generation of analysis models (time savings!)
  - ➔Not deep knowledge of mathematical aspects.

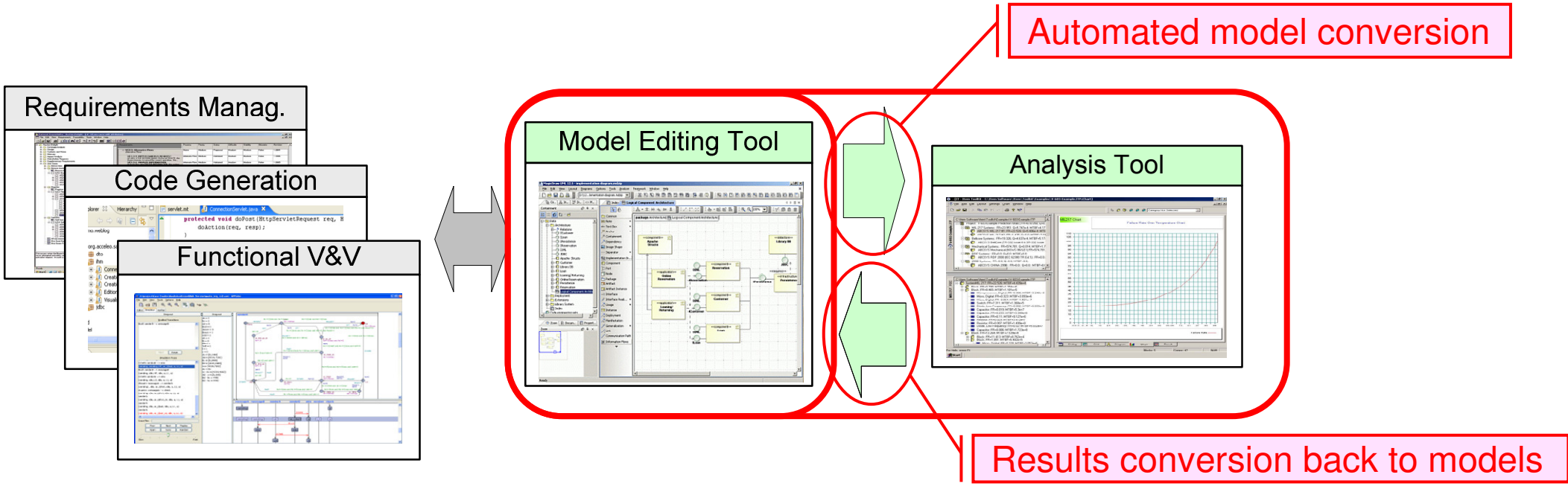

MARTE Scope

- UML is not sufficient for the real-time systems domain!
  - ➔ The ”Profile” mechanism allows for creating UML-based DSMLs…
- MARTE: A UML Profile for
  - ➔ **Design**:
    - ➔ **Modeling HW and SW platforms**
    - ➔ **High level abstraction “application” constructs (specific models of computation)**
    - ➔ **Component-based design**
    - ➔ **A rich model for logical time, real-time and time mechanisms**
  - ➔ **Analysis:**
    - ➔ **Support for Performance Analysis (Queuing theory, Petri nets, …)**
    - ➔ **Support for Scheduling Analysis (Rate Monotonic Analysis: RMA, Offset-based techniques, Compositional techniques,..)**

MARTE is to the real-time and embedded systems domain as UML to the system and software domain: the standard modeling language!

Schedulability Analysis Modeling in MARTE

Context of the SAM Sub-profile

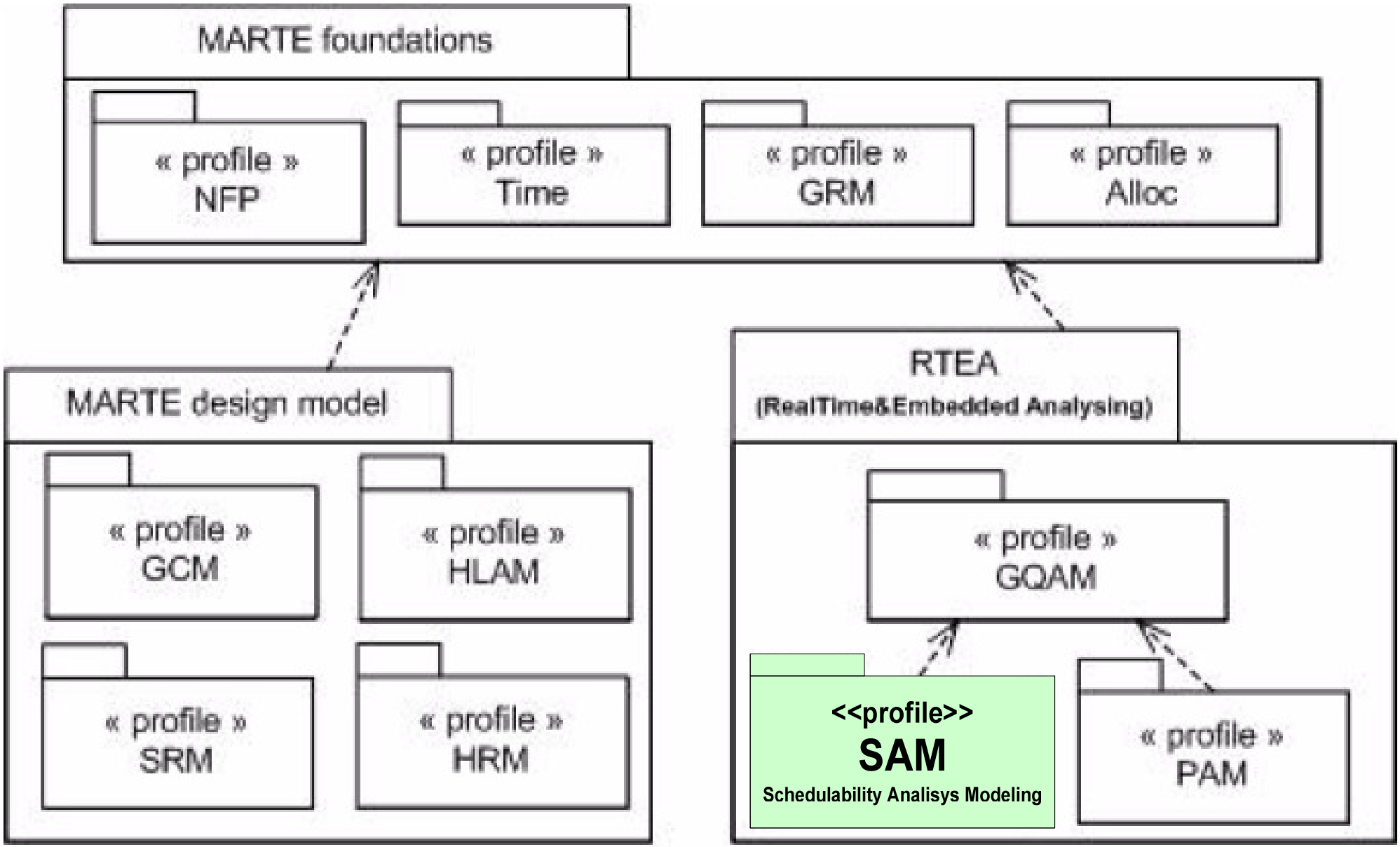

MARTE's Generic Modeling Approach

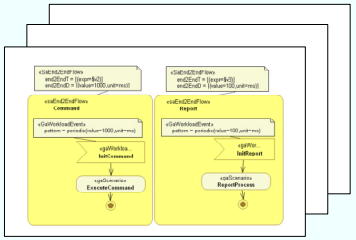

→ Structure and Behavior
→ Timing Requirements
→ Time- and resource properties and constraints

Application Model with Non-Functional Constraints

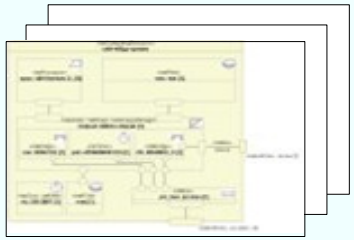

→ MARTE data types: NFP Types, units,...
→ RTOS Libraries
→ HW Component Models

Platform Models (Libraries)

Allocation

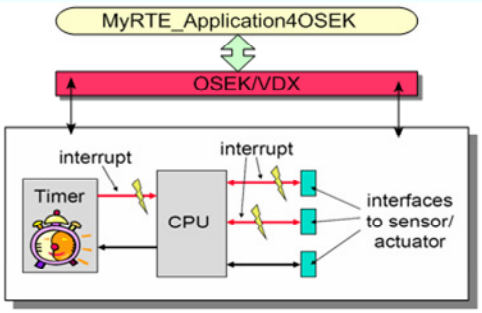

Generated Code

Validation of Non-Functional Properties

Integrated and Validated System Model

Input Files for Analysis

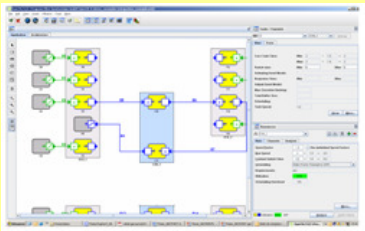

Analysis Tools

Application Layer

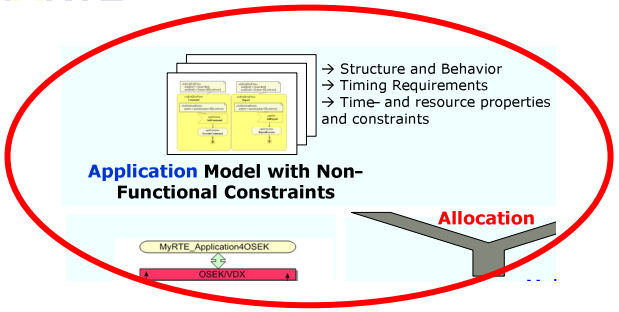

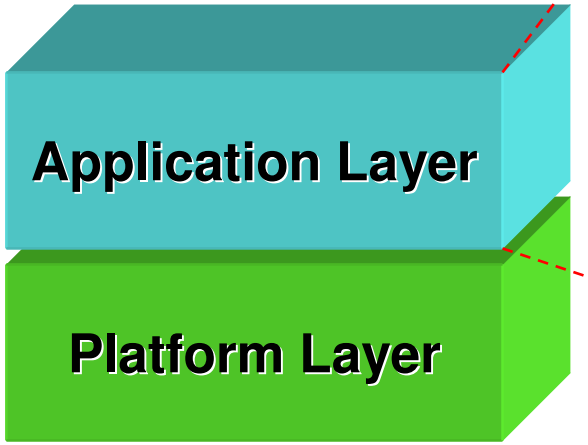

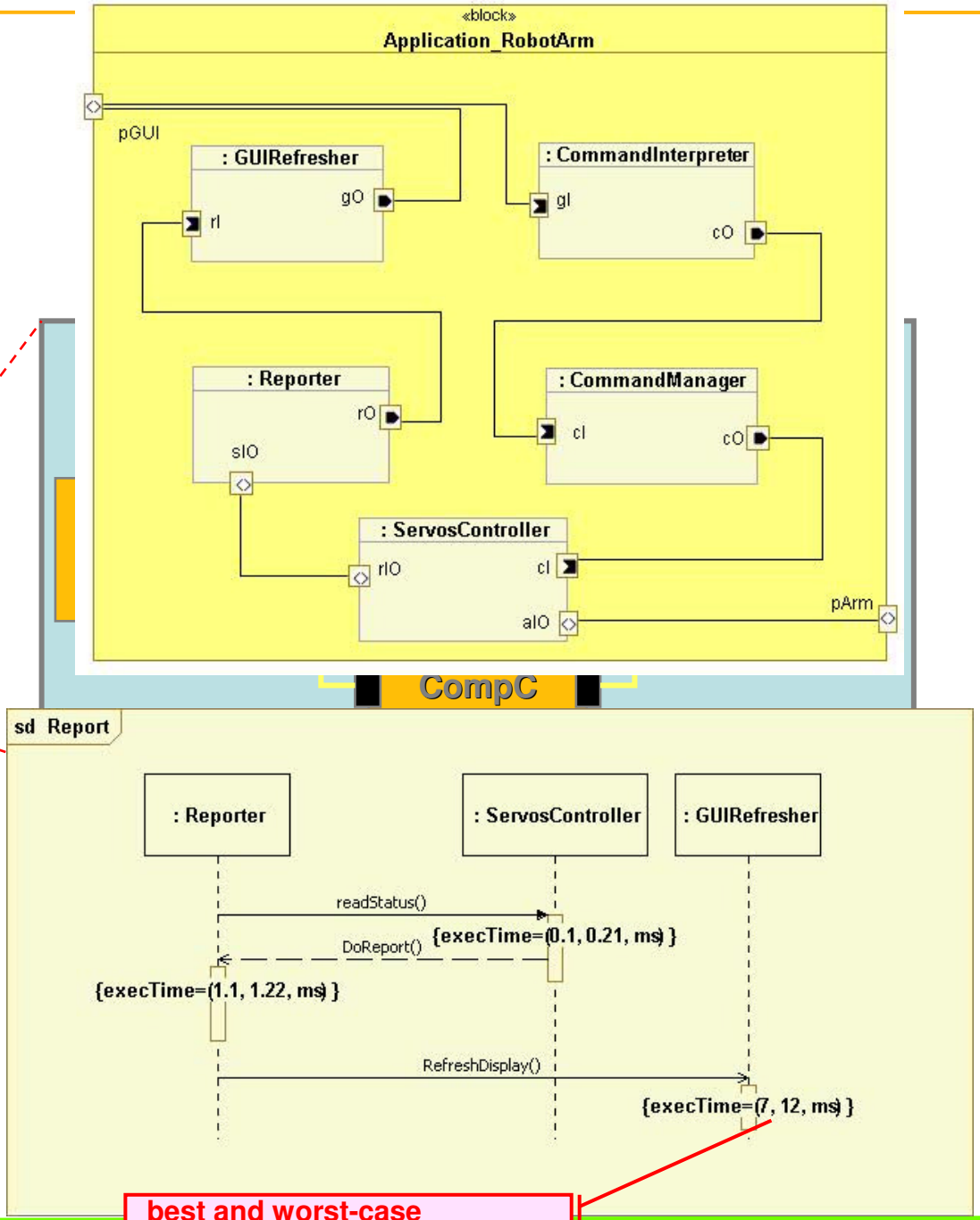

Platform Layer: HW & SW Resources

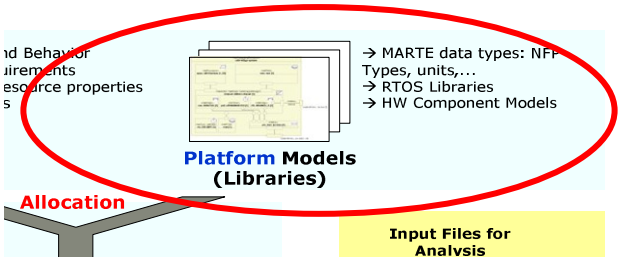

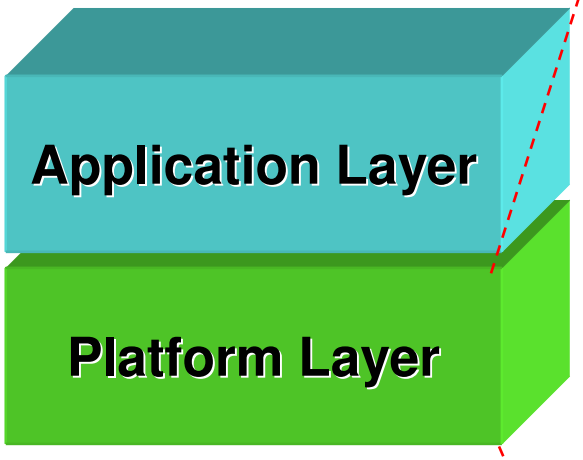

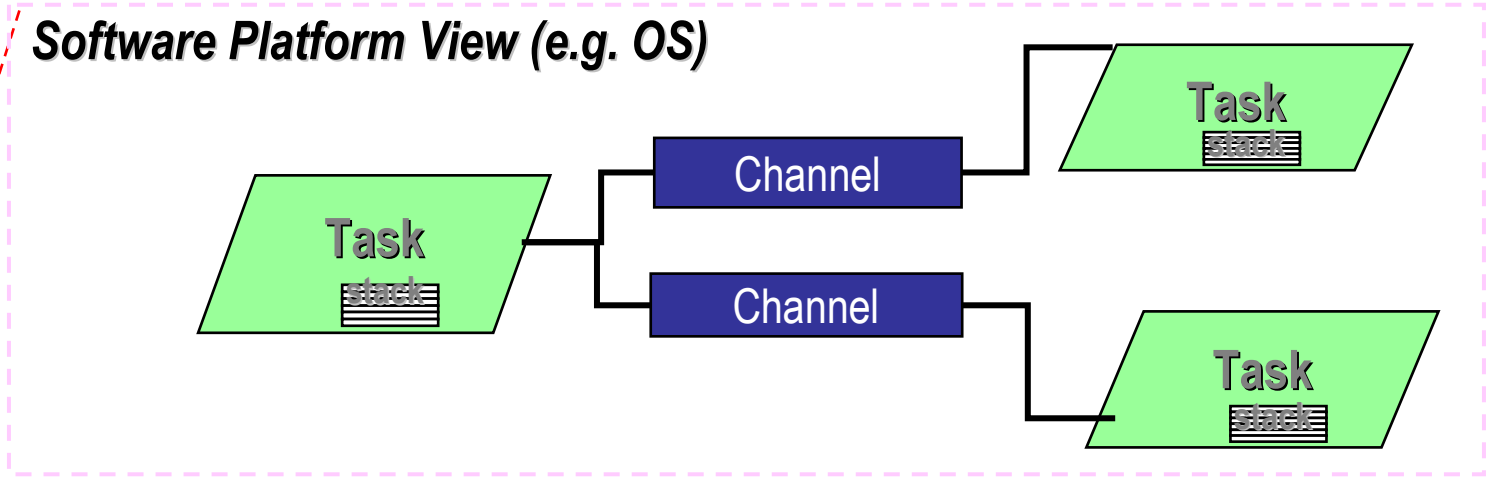

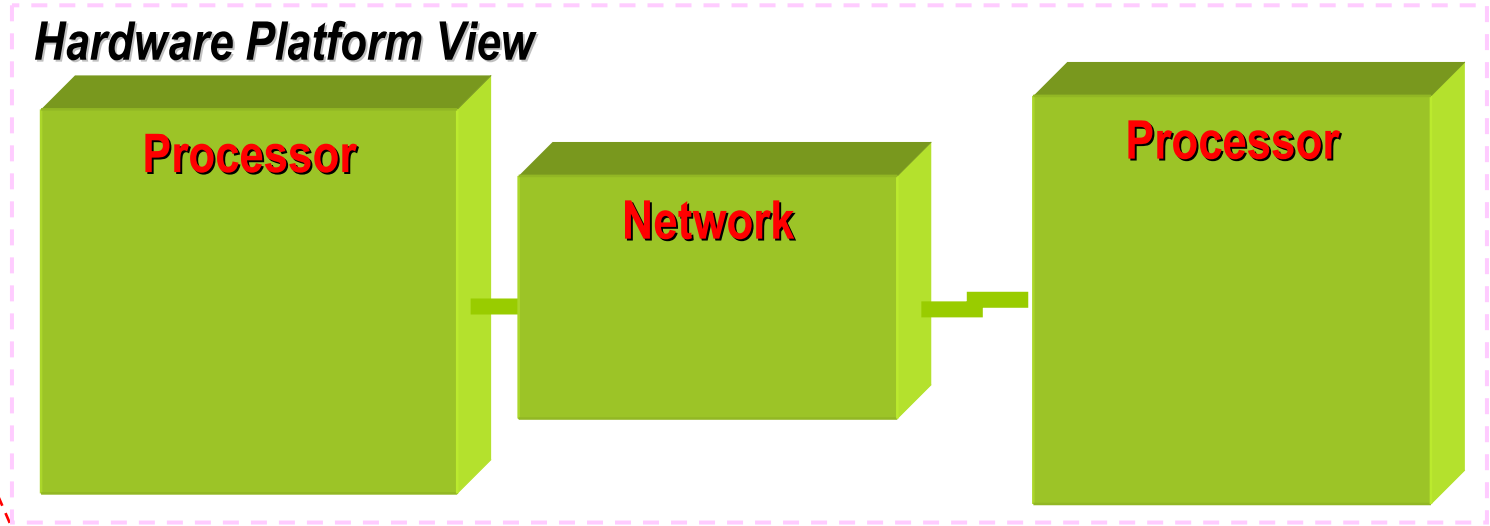

Platform: Hardware Resources

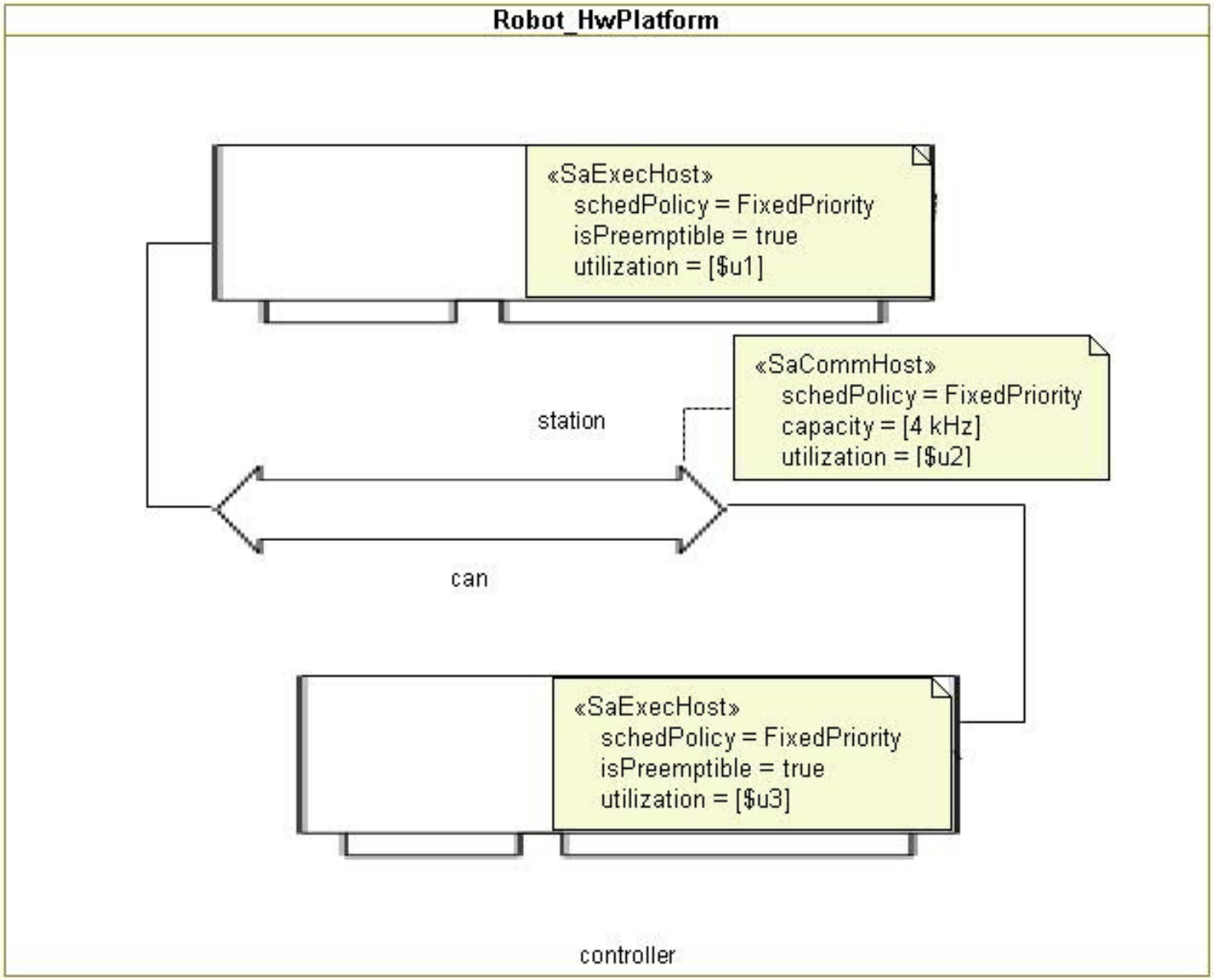

Platform: Software Resources

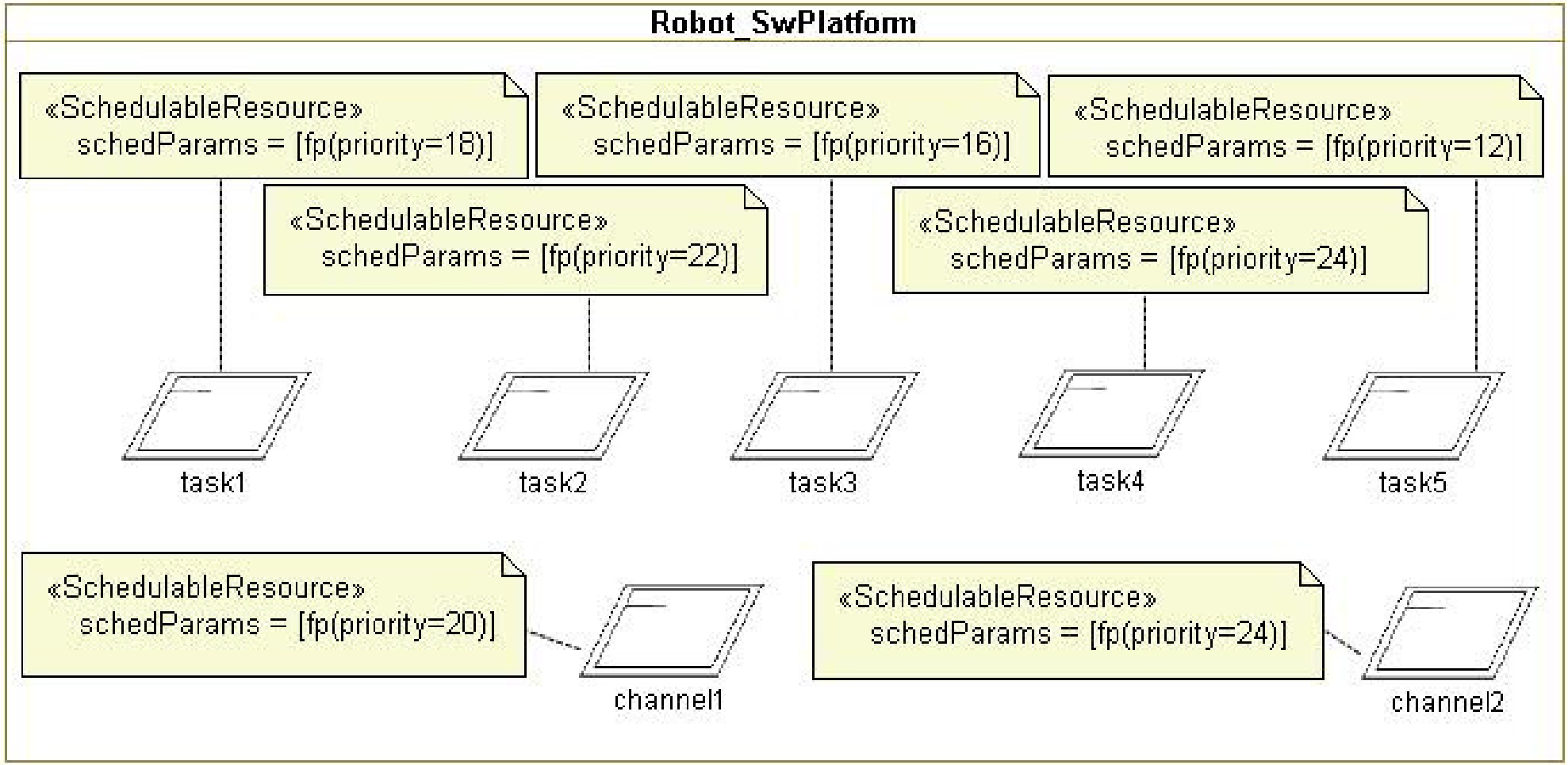

Allocation Model: Analysis Context

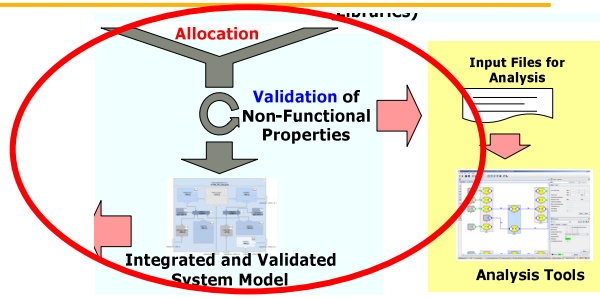

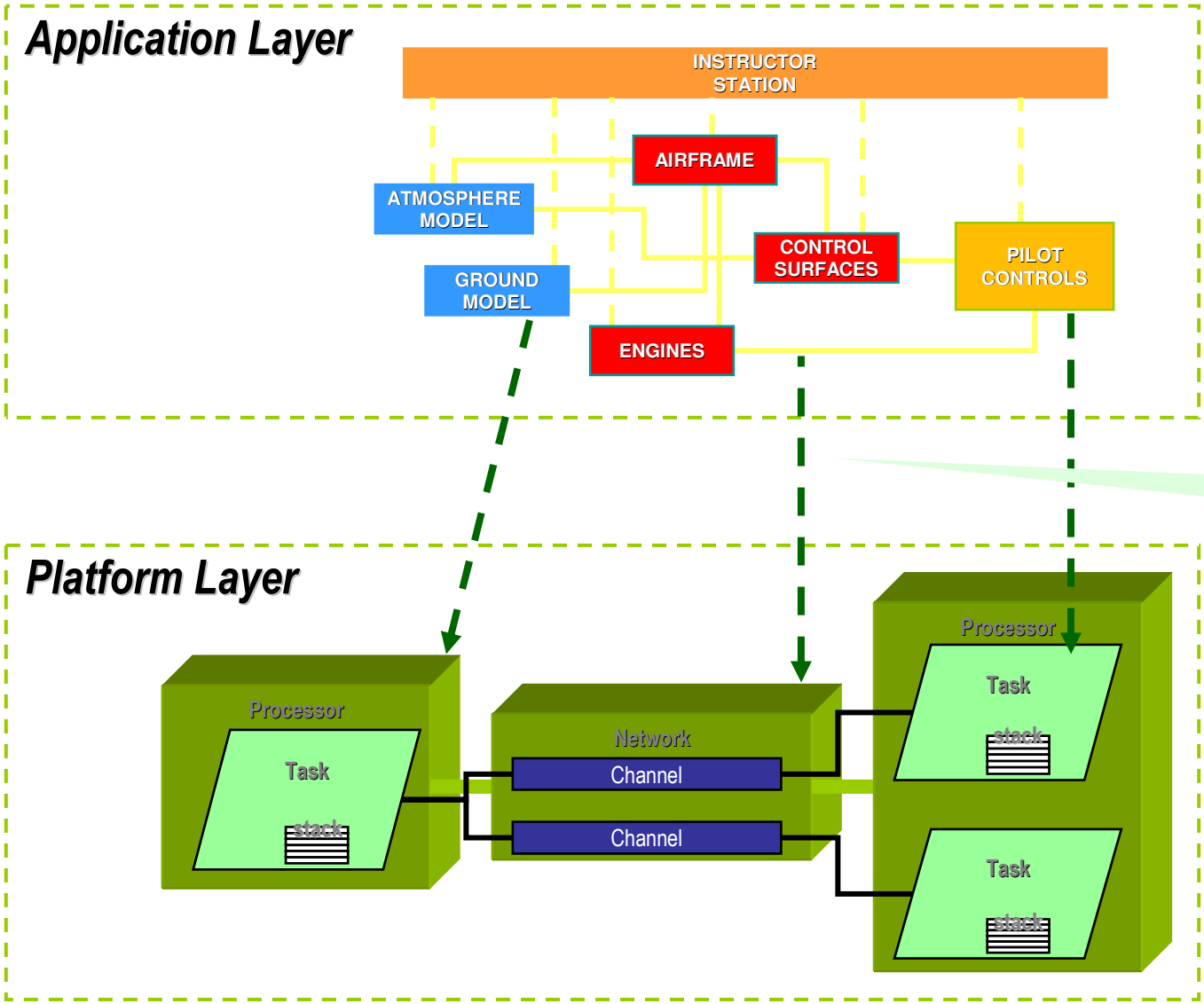

Allocation **mappings**

Allocation Model: Analysis Context

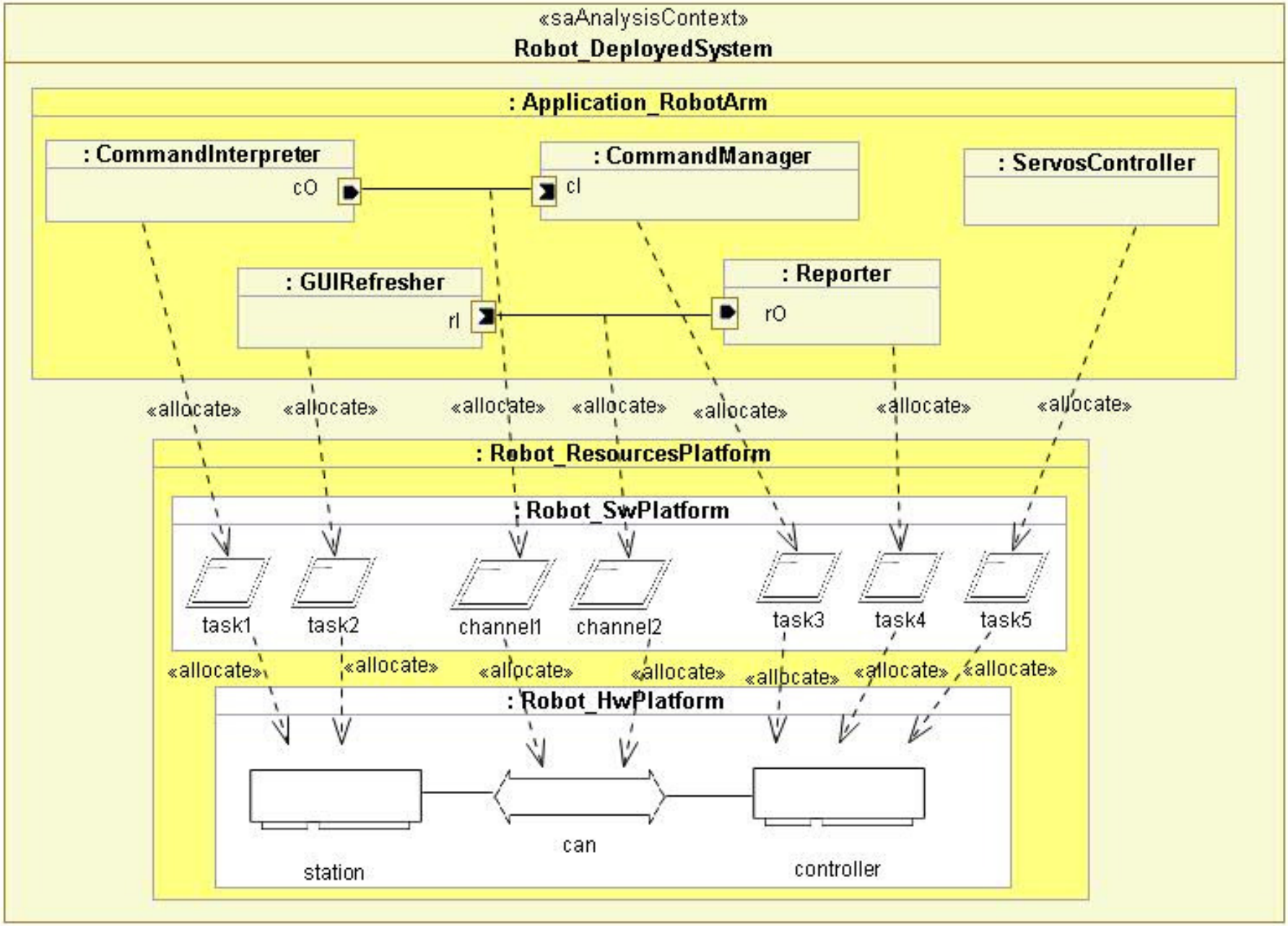

Deployed Model: Analysis Context

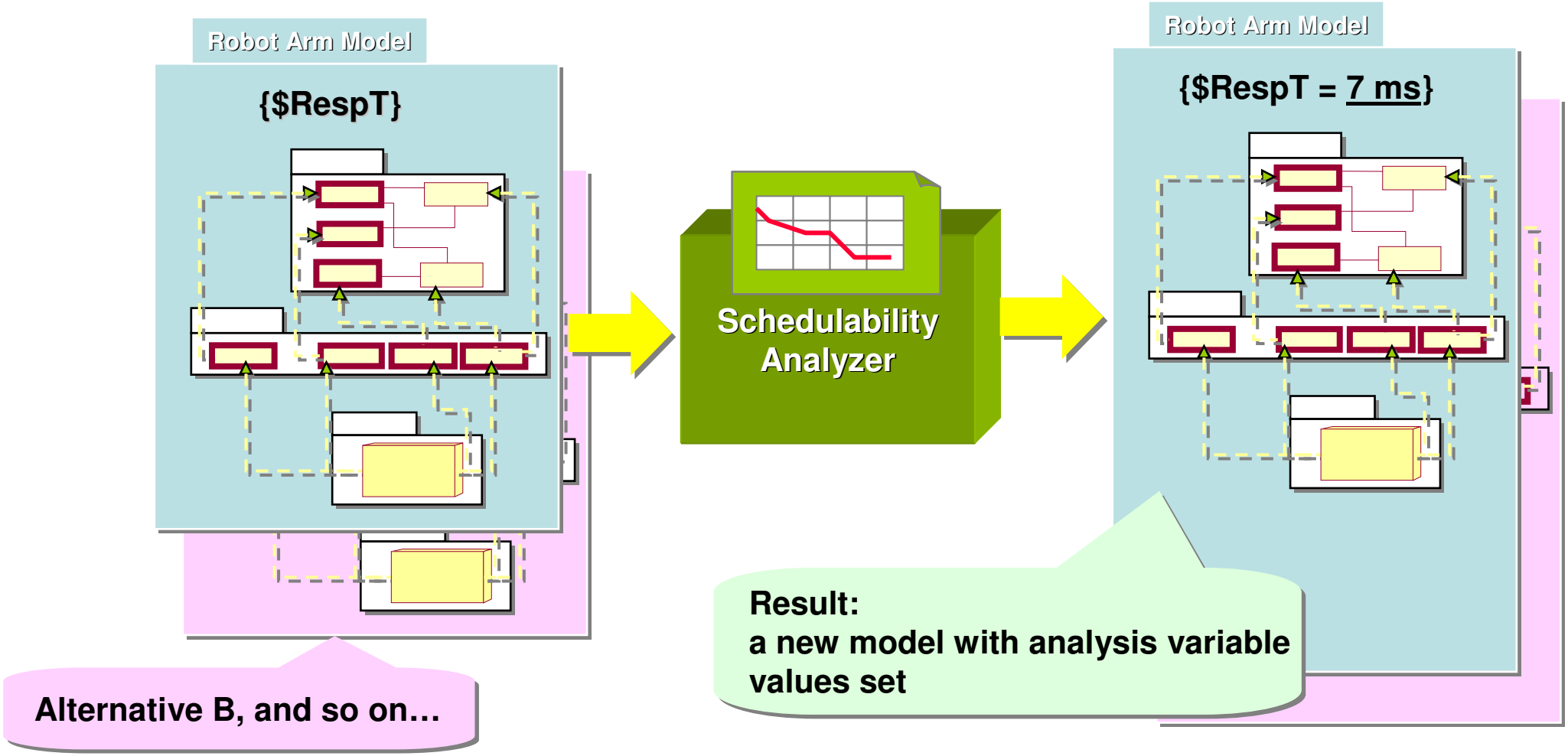

MARTE Support for Scheduling Analysis

- The *MARTE SAM (Schedulability Analysis Modeling)* package factorizes expressiveness of a set of well-established techniques and tools…

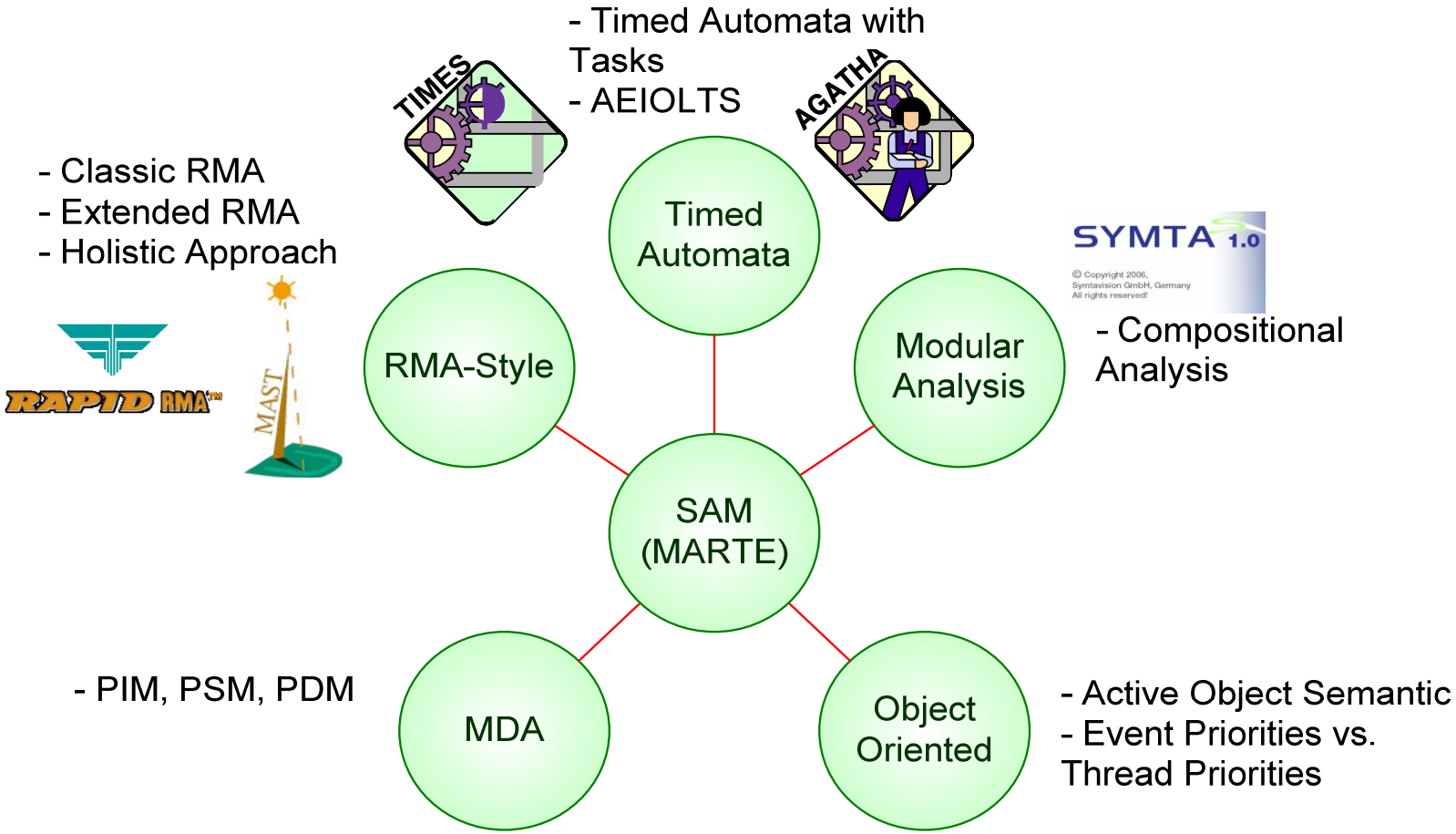

questions